Design For All, Publication of Design For All Institute of India, Vo. 9, No. 11, Nov. 2014

ACCESSIBILITY IN THE OLD CITY OF JERUSALEM

Audit planning and implementation

Judith Bendel, Meirav Davish Ben Moshe

1. Introduction and background

The Old City of Jerusalem extends for 950 square meters, and is characterized by very dense population, about 38000, residents (Jerusalem Statistical Yearbook, 2014).

The Old City of Jerusalem has been settled continuously for more than 3,000 years. The current structure including the Old City walls and location of its gates exist since the early medieval era (Prawer, 1972; Rubin, 1999). The Old City contains a mixture of old and new construction, archeology, history, people of many different religions, holy sites for each religion.

The holiness of the city to most major religions and its unique structure, mark the City as an international tourist destination, also for people with disabilities. In addition to the residents there are about 10 million visitors per year.

Making the public space of the Old City of Jerusalem accessible to people with mobility impairment is a complex and difficult task, yet very important. Greater accessibility will benefit everyone and contribute also to the quality of life of its residents, and residents with disabilities in particular.

This article discusses the tools, planning and implementation processes of accessibility in the unique and complicated nature of the Old City of Jerusalem, a model for other historic cities.

2. Description of Structure and topography

The Old City was built in a Medieval Mediterranean scheme, based on a former Roman city, on two hills separated by a valley. Two main streets, the north-south Cardo Maximus and the east-west Decomanus Maximus, divide the Old City into four quarters, each containing residential block areas, schools, prayer places, etc. (Bahat & Rubinshtein, 1990).

The present design resembles other Middle Eastern cities. It is based on residential enclosures, connected by major streets allowing for free passage among the different parts of the Old City. Dead end streets and alleys lead to the residences. Many of the residential homes are located on top of the commercial areas. They can be reached only by staircases, starting from internal dead end alleys. (see Figure 1)

Figure 1. Semiprivate residential dead-end alley. A typical inner residential alley demonstrates different styles, sizes, angles and directions of staircases in one street, all serving private residential compounds

The main streets have the main trade markets, which overflow to the nearby streets, as well as most of the municipal and religious public buildings.

Some of the streets are sloped very steeply due to the natural topography. Many of the sloped streets were built with stairs to accommodate the pedestrians, while minimizing the slope between the staircases. The buildings were built along the streets, therefore the level of the entrances to the shops or houses correlates to the slope and subdivisions created by the steps.

Because the streets are hundreds of years old and surrounded by very high density construction, their width in general is at its maximum 3 m, and often the space available for

pedestrians does not exceed 1.50 m. In addition merchandise is displayed on the streets in front of shops; therefore the pathway is even narrower. (see Figure 2)

Figure 2. One of the main trade markets, which merchandise overflowing into the street.

In addition the physical infrastructure is often in poor condition due to wear, later additions to the original design etc. In some places the uneven pavement has archeological and historical value. (see Figure 3)

The structure based on insulas with winding and dead-end passages makes orientation very difficult, particularly for blind people, who are unable to maintain their internal "compass". Also People with perceptual problems may find it hard to create a cognitive orientation map.

The seven well-preserved city gates are the only way to connect this area to the New City, outside of the Old City walls. A green area around the walls helps isolate the Old City from the new construction outside of the walls. The decision to have this separation was made in the 19th century, and it is maintained to this day.

Figure 3. Via Dolorosa, with original Roman pavement in situ. A section of the Via Dolorosa is paved with original large Roman stone tiles and is combined with much smaller stone tiles of the twentieth century. Pedestrians, carts, and wagons use the pavement intensively on a daily basis.

3. Mobility and transportation

There is no public transportation system within the City walls. Three mobility systems are currently interconnected within the walls of the Old City.

- *Tourists and visitors*: The most common is for pedestrians who can use all streets, as long as their physical fitness permits them to use the stairs. Wheelchairs or Scooters can be used in some flat streets or some streets where some arrangements were made, for example for transporting merchandise. (see Figure 4).
- *Local municipal services*: Carts and cars, built specially to suit the crowded streets, are used for transporting merchandise, disposing garbage, emergency ambulance etc. For that purpose, narrow stone ramps were added to enable pushing them. These ramps are fitted to meet the distance between cart wheels (see Figure 5).

Figure 4. Semi commercial street, Christian Quarter. A Street constructed as a stairway is paved by limestone tiles with a handrail mounted on the left façade wall. Narrow stone ramps are anchored into the stairway for scooter and wheelchair users as well as pushers of carts and wagons.

Figure 5. Residential stairway street in the Moslem Quarter. Narrow municipal service wagon, specially adapted for the narrow stairway streets, are an effective way to provide the Old City with routine municipal sanitation and maintenance services.

- *Residents*: Cars can be used only in a limited number of streets close to the Old City gates for residents only. There is no room for a side walk in these streets.

4. The problem of planning upgrading

For many years there were no significant renovations done in the Old City. The conditions described above present enormous problems for pedestrians with mobility difficulties – narrow streets and stairs that leave no room for ramps suitable for wheelchairs, wear of infrastructure etc.

With the urgent need to upgrade the infrastructure for the increasing number of residents and tourists, a major comprehensive planning project was needed. This project was designed to address general concerns, with particular attention to incorporate accessibility into the overall plan. A multidisciplinary team was set up for this purpose and was coordinated by the Jerusalem Development Authority[1]. Priorities were proposed for each street.

The accessibility planning sub-team was faced with two major dilemmas:

- How to implement the official national guidelines for accessibility[2], to include people with physical, sight and hearing impairments as well as orientation difficulties, in the complex context of the Old City.
- How to develop a meaningful plan, since no criteria to prioritize the overall accessibility needs were available.

There are many cases in which enforcement of the guidelines for barrier-free design is problematic. As a result, there are buildings and environments that do not comply with the requirements.

Old cities throughout the world are the ultimate environments for facing difficulties with enforcement of the guidelines. Adaptation of environments and facilities must be undertaken in accordance with standards required by law, as well as with the goal of meeting the needs of the consumer. At the same time, access needs and universal design must also

[1] The team was composed of representatives of the following disciplines, services and entities: architecture, civil engineering, electricity, civil engineering, electricity, sewage, water, tourism, archeology, preservation, heritage, emergency services, religions, community organizations, and accessibility.

[2] As in many countries, Israel has laws, regulations, and guidelines for barrier-free design. These guidelines, although often similar in nature, vary from country to country. In many countries, including Israel (The Standards Institution of Israel, 2013; Guidelines for Accessibility in Open Spaces, The State of Israel, 2008) and the U.S. (ADAAG, 2010), the standards refer to minimum requirements. In Israel, as in the United States., full compliance with the standards is required only for construction of new buildings, as well as alteration of existing buildings. Structural barriers must be removed from the latter however if complying with the Standards is not readily achievable, modification that does not fully comply may be approved on the condition that it poses no health or safety risk.

relate to: heritage; historic and archaeology needs; preservation as opposed to modernization and progress; tourism; and local citizens' welfare, different religions' needs, etc.

5. Accessibility audit tools

The first step in addressing the demand to provide accessibility is to collect consistent, reliable and objective access information.

There are guidelines, but no official audit tools to assess compliance. Accessibility checklists are most commonly used to assess the degree to which both existing and new buildings satisfy legal criteria for access planning. For example; the purpose of the Americans with Disabilities Act (ADA) checklist for Readily Achievable Barrier Removal (*ADA* checklist *for Readily Achievable Barrier removal*, 2010), e.g., is to assist public accommodations as the first step in a planning process for readily achievable barrier removal. This tool checks for compliance with the *ADA Accessibility Guidelines* (2010) and has been widely used in the U.S. since the passage of the ADA. Other examples are Ireland (*National Disability Authority (NDA)*, 2012), U.K (Physical accessibility audit checklist 2014) UK (Wycombe District, 2014)

Checklists are commonly used also for tourism. Many countries publish access information for tourist sites at least for a specific region or city. For example, UK (Visitbritain) Spain (Barcelona tourism), Ethiopia (US Aid, Handicap International). However, open space audit such as street and areas in cities which are also tourist attractions are less common.

Most existing data collection tools are not supported by data analysis tools. Several authors focused on identifying instruments that measure the built environment and tourist sites. For example, The Enabler (The Enabler, 2005), assesses private homes (Scoring is dependent much on the evaluator's judgments). Other tools attempt to assess hazards that persons with physical or cognitive deficits face in their homes and obtain a residence hazard score, with the ultimate purpose of predicting and preventing falls and other injuries. (Clemson, Fitzgerald, Heard & Cumming, 1999).

In the tourism industry some attempts were made to score a site based on the checklist mostly analyzed by hand. For example (Tourisme et Handicap association, 2014). A decision support system tool for evaluating accessibility of various facilities including tourist sites was created in Israel using mathematical equations based on the specifications of the official guideline requirements (Bendel, 2006).

Most of the evaluations or audits were done regarding accessibility in existing buildings, public transportation, or tourist sites. Emerson (2008) in Ottawa and tourist sites in Chicago (Open Doors Organization, 2010) are examples.

In old cities as well, although there is extensive activity all over the world on matters concerning the rehabilitation and upgrade of old and ancient cities and quarters, in many cities planning efforts and resources are limited to localized accessibility for sites, buildings with historical, archaeological, tourist attractions. Work was done on renovation and upgrading, for example; Athens, Greece and Ávila, Spain. A *Management Guide of Historic Cities* was published by the Organization of World Heritage Cities (2013), but accessibility was not addressed intensively. Specifically, not much work was reported on audit tools and criteria to evaluate old cities.

In regard to accessibility in the Old City of Jerusalem, the planning unit was required to make decisions and prioritize the required work. The work in planning accessibility resulted in an attempt to create such an evaluation tool, as well as a model for decision making. The pilot decision support system focused on the interplay between people and the built city environment. The results of the audit highlighted items in the Old City, that required adaptation or upgrading to better meet users' needs, and it prioritized items for implementation.

6. Audit of accessibility, decision support and evaluation system for old cities

Since the official guidelines do not take into consideration the unique situation in old cites, an attempt was made to formulate a new standard for accessibility, specifically designed for the Old City of Jerusalem. The criteria were defined with the official standards in mind. Deviations from these standards were allowed for reasonable accessibility within the complex layout of the Old City.

The decision support and evaluation system, created for this purpose, is a unique and bias-free tool.

Criteria were defined to grade accessibility of specific elements and spaces separately, e.g., route width, slope, etc. At this stage, weighted criteria were defined specifically for people with mobility impairments, including persons using wheelchairs, crutches, or other assistive devices.

Grades were given on a scale from 1-5, as follows:

1= inaccessible, no simple solution is apparent;

2= requires major renovations;

3= requires some renovations;

4= requires some superficial improvements of surfaces;

5= accessible according to national standards, no renovations required.

Audit of accessibility in the Old City

The audit of accessibility in the Old City was the first step taken in order to study and highlight the problems to be addressed in the planning process.

Methodology

Information was collected regarding the streets' suitability for individuals using wheelchairs, crutches or walkers, or individuals with walking difficulties without aid devices. Another element was added to accommodate the need for appropriate orientation.

The audit took place in all streets and alleys of the Old City, regardless of the size, popularity or population. The audit included public open spaces only, to identify obstacles. No buildings were evaluated at this stage. Written and photographed documentation were produced (Bendel, 2008).

The main variables studied were:

- *Width*: When the width of the streets was not uniform along its entire length, an approximate average width of the street was established.
- *Height*: Some streets were covered, and the ceilings low. In others there were other obstacles, such as, old logs sticking out of the walls and protruding into pedestrian paths.
- *Slope*: Besides the steepness of slopes, the availability and standard of handrails was evaluated.
- *Stairs*: Size, height, surface, distance between steps and groups of steps were measured. Here again the availability and standard of handrails was assessed.
- *Surface*: Roughness of the surface, bumps, holes, missing, and uneven or broken tiles were noted.
- *Obstacles*: In addition to surface problems, poles, road blocks, electricity, telephone, other distribution boxes, and other permanent obstacles to travel were noted.
- *Signage*: For the purpose of general orientation, the location and design of signage were studied; the accessibility of signage according to the guidelines was not addressed.

Two sets of criteria were defined to analyze the data were defined by a multidisciplinary team of experts (rehabilitation and accessibility experts, and an architect). The approach considered the interaction between the individual and the environment, as well as possible combinations and variations between the different elements of the design.

The first set of criteria consisted of each specific elements audited, such as, slope. In other words, if the specific element in the street complied with all requirements for mobility impaired users according to the defined standards and behaviors (as defined by the criteria mentioned above), the element received a score of 5. However, elements received a score of 4 if some of the components did not fully comply with the standard but enabled some access. For example, the slope received a score of 4 if all components complied with the standards except, for example, the width of the slope being less than required.

The second set of criteria defined the overall accessibility of the street. The overall weighted grade was computed based on all the different elements, using the grades of each element determined by the first set of criteria. The relative importance of each element and the connection between elements was considered in the definition of the criteria. If all the elements at the street complied with all defined requirements, the street received a score of 5. However, if most the relevant elements received a score of 5 or 4, but one element scored 3, then the total score was 3. As such, the system is flexible, and the criteria can be further developed and refined.

Results and decision making

Once the two sets of criteria were defined, all streets and alleys of the Old City of Jerusalem were graded and mapped accordingly.

A total of 126 streets were analyzed:

10 streets received the highest grade 5 (two streets received this grade just for certain sections).

35 streets were graded 4 (including some for just certain sections).

22 streets were graded 3 (including some for just certain sections).

24 streets were graded 2.

The remaining 35 streets were graded 1

These results indicate that the majority of streets in the Old City require a high level of intervention to improve their accessibility.

A decision was taken to start work on the streets which graded at least 3 on the surface criterion (Shekel, 2011).

Yet, in addition to decisions based on the use of the grading system, some other components had to be considered and dealt with before any recommendations or upgrading could be implemented, such as public vs. private land ownership. Not all public areas, such as, streets alleys and squares, are public properties and everything beyond the entrance gate or door is private property in the Old City of Jerusalem. Inner dead end alleys are semi-private property, welcoming only local community members. In other cases, streets are owned by the church. Therefore the residents' consent to cooperate with the plan to upgrade their property is crucial and is not always in accordance with their priorities.

After much struggle with the problem, the planning team, with the input of policy makers, concluded that each priority area has some balance between the needs of the residents and those of the tourists, with emphasis placed on residents' welfare.

The streets were than mapped based on three priority components:

- Access leading to schools, especially special education schools
- Access leading to local public services
- Access leading to meaningful Islamic, Christian, and Judaic religious sites

This decision created momentum for resident participation, despite density, distrust, costs, and other factors.

7. Implementation

A five year work plan for improving accessibility to the public in the Old City was prepared as part of the Old City upgrade project (Shekel, 2011). Four different areas meeting the aforementioned criteria were chosen for the pilot phase of the project.

The Jerusalem Development Authority assigned a multi-disciplinary planning team[3] to prepare a manual for the Old City renovation in which the main general issues of the public spaces are outlined and detailed. The chief architect of the Jerusalem Municipality suggested that the design of the public space in the Old City be unique and different from the generic planning outline for the public space of the New City of Jerusalem and should deal with the

[3] The team included representatives from all the municipality departments, community workers, and professional consultants: Safety, Construction, Preservation Team, Old City Master Planners, Old City Accessibility Team of the Jerusalem Development Authority.

most important features of street design language: consistency, clarity and simplicity which follows the hierarchic approach from the general to the particular (Weiner-Singer, 2009). Teams of architects led sub-teams of city planners and prepared the detailed plans of each street. The detailed plans used design elements based on the principals in the manual, in order to meet the specific needs for the development of each street. In this way a general uniform design line was maintained for all streets.

The Manual

The "Streetscape Manual for the Old City of Jerusalem" (Davish Ben Moshe, 2013)[4] is a comprehensive document, and the result of a lengthy process of intense study of the area, as well as the involvement and cooperation of residents, shop keepers, members of the Israel Antiquities Authority and other organizations operating in the Old City.

The main challenge, as mentioned above, was to upgrade and adapt the existing structures as much as possible using various means, such as steps slopes and ramps, etc; the purpose being to allow access to emergency vehicles and auxiliary aids and also for people who use fixed landmarks for orientation[5], by using up-to-date professional standards, while at the same time maintaining the character and uniqueness of the area.

It is hoped that also future design improvements will be resolved through cooperation and negotiation, on the basis of these guidelines.

Manual Goals

• to guide designers in solving typical problems, related mainly to street planning in accordance with safety and accessibility guidelines.

• to create a general framework, from which exceptions may also be derived including – solutions to specific issues and special adaptations depending on the nature of the place and the behavior patterns of its inhabitants.

---

[4] The manual received the Laureate "Urban Design Prize" (OtHaitzuv) a national competition led by Domus Israel competition in design awarded in Tel Aviv 18/4/2013. The short clip describes the genius loci atmosphere of place, and the design process:
https://www.youtube.com/watch?v=GI-fn-FjwVA
The manual is currently being translated into Arabic and English.

[5] This refers to people who have limited vision or significant difficulty in spatial perception and other problems.

• to characterize typical street elements and create models for the use of materials, textures and shades.

Design Concept

The Streetscape Manual was planned in accordance with the Master Plan for the Old City (Shekel, 2011) and the hierarchy of the Old City streets as presented in the plan.
The manual does not differentiate between the various quarters in the Old City and follows the following hierarchy (see Figure 6):

A -Tourism and Heritage

B - Routine Life (every day life-streets with a mixed commercial and residential nature)

C - Residential.

This hierarchy also dictates the priorities. Most of the main streets in the **A- Tourism and Heritage** category are planned to contain the most accessibility, whereas in most of the streets in the **C- Residential** category, which are typically small alleys, accessibility is more difficult due to topography and formation, therefore requiring more modest design details.
The **B- Routine Life** category contains a combination street design plan of both the Tourism and Heritage and the Residential categories.
The major difference between the design elements is mainly in the details of paving the road surfaces, steps, slopes and related infrastructures-drainage and manholes in order to keep to the original design.
The rest of the open space fixtures, such as handholds, railings, benches, waste baskets, etc., are used in all types of streets in the same way, allowing alternative choices to satisfy optimal local adaptation.

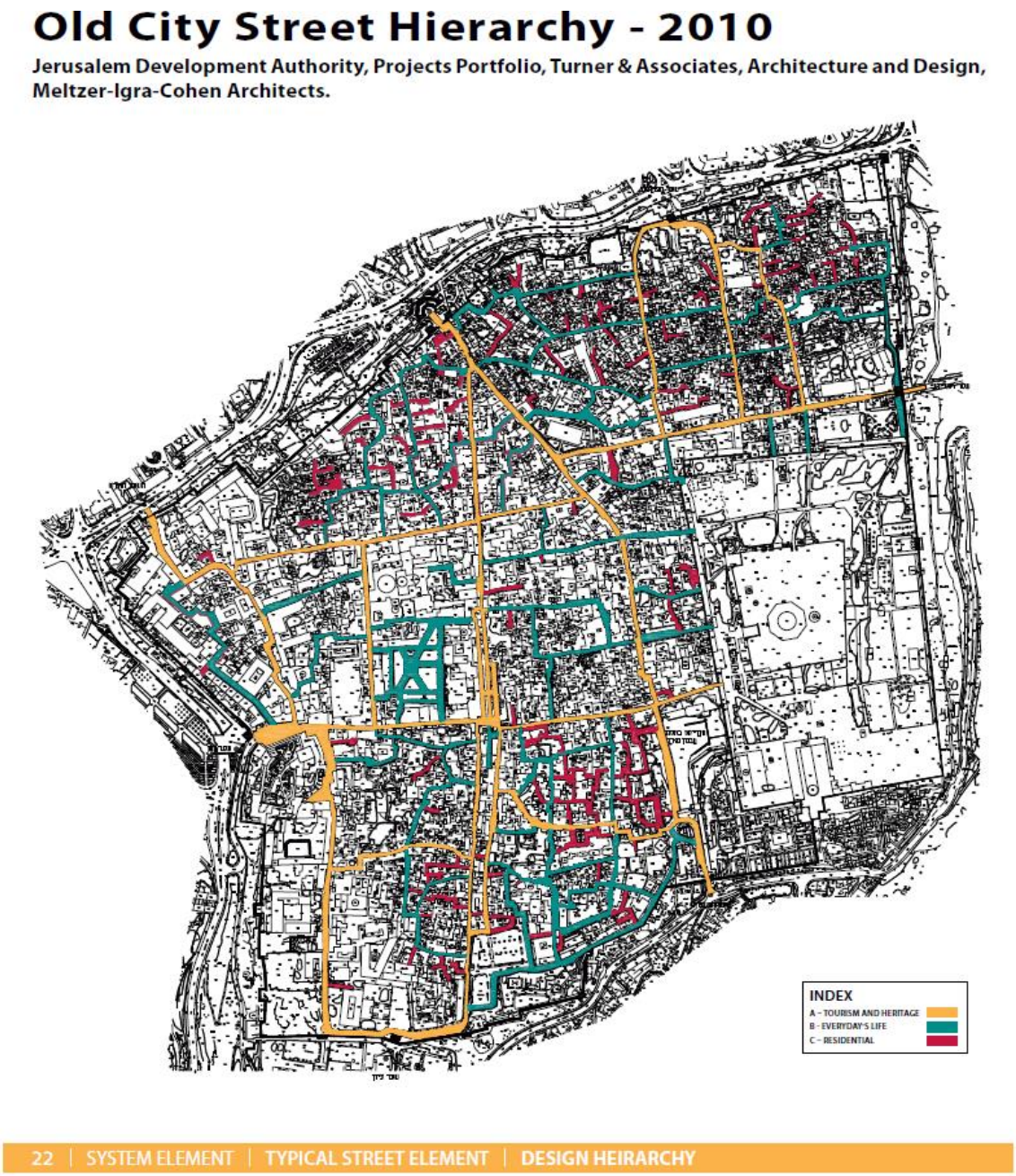

Figure 6. The old city street hierarchy, showing the 3 main types of streets:A- Tourism and Heritage,B- Routine Life (every day life) C-Residential, the basis for the implementation plan

Manual Structure

The manual is divided to 3 main sections:

- **System details** – design components and rules for the main typical street category elements i.e.: A – Tourism and Heritage routes; B – Routine Life routes; C – Residential routes. The system details contain all components of the typical street elements (see Figure 7).

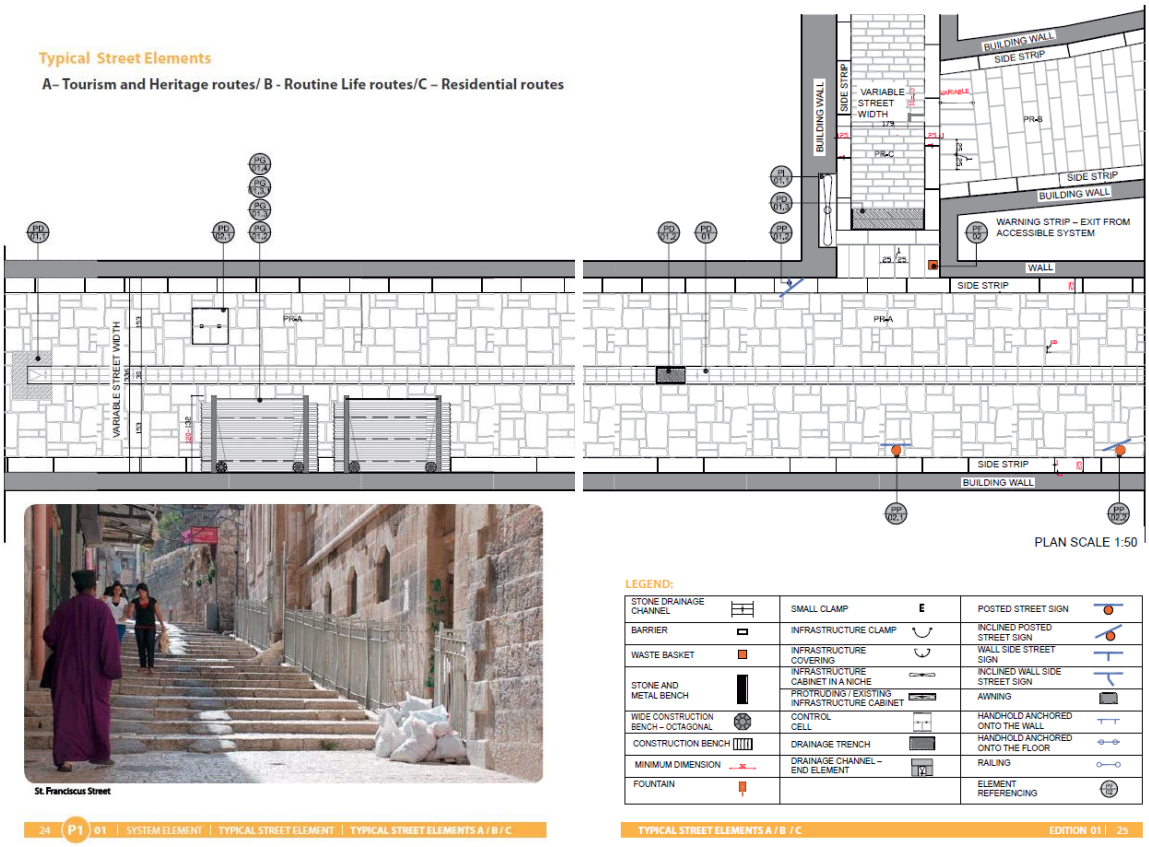

Figure 7. An example for typical street element – plan and photo before renovation presenting the problem

- **Sub-system items**: street surface and structure and infrastructure components i.e. paving, material: stone, street intersections (PR) stairs (PM), ramp and slopes (PN) drainage and manholes (PD).

Detailed design sketches come with all elements. For example (see Figure 8):

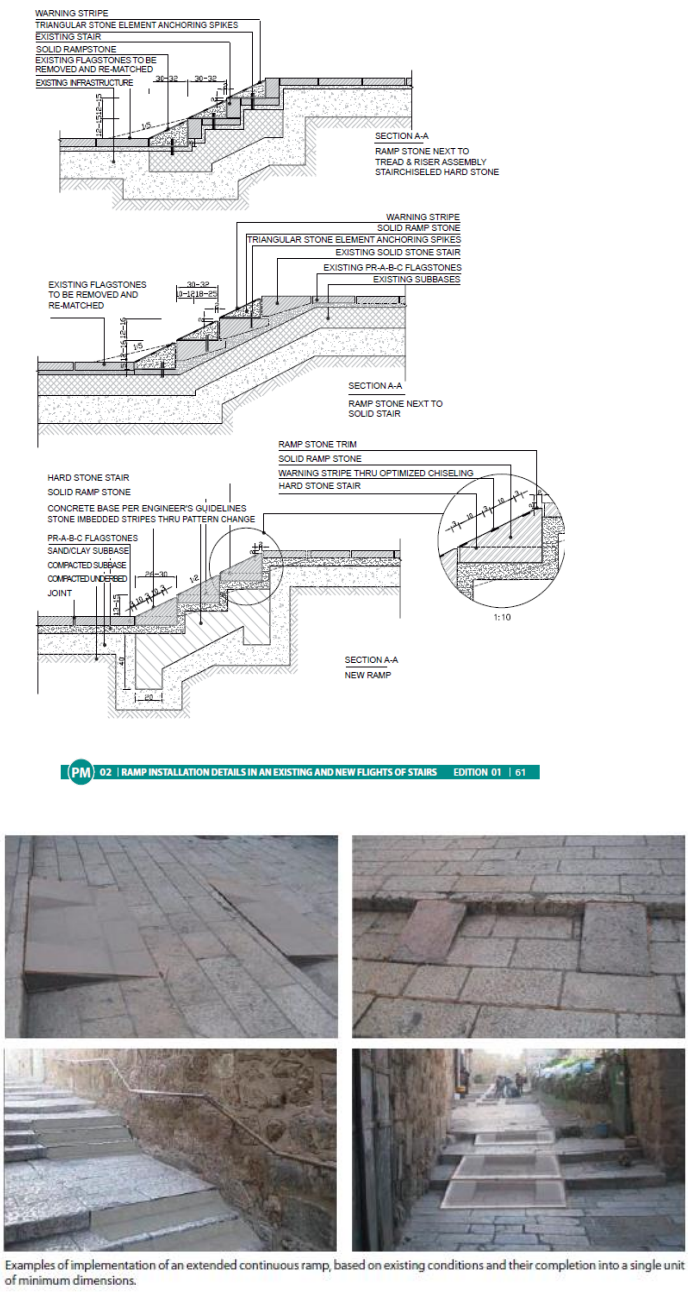

Figure 8. An example of ramp design detail.

- **Individual elements:** street fixtures and supplemental items that create its look and feel, i.e.: street and building infrastructures (PI), awning design (PG), handholds and railings (PS), signpost design (PP), street furnishings and fittings: bench – PF-01; waste basket – PF-02; drinking fountain – PF-03; barrier post- PF-04. These items apply to all categories without distinction between them. Detailed design sketches come with each and every element. For example (see Figure 9):

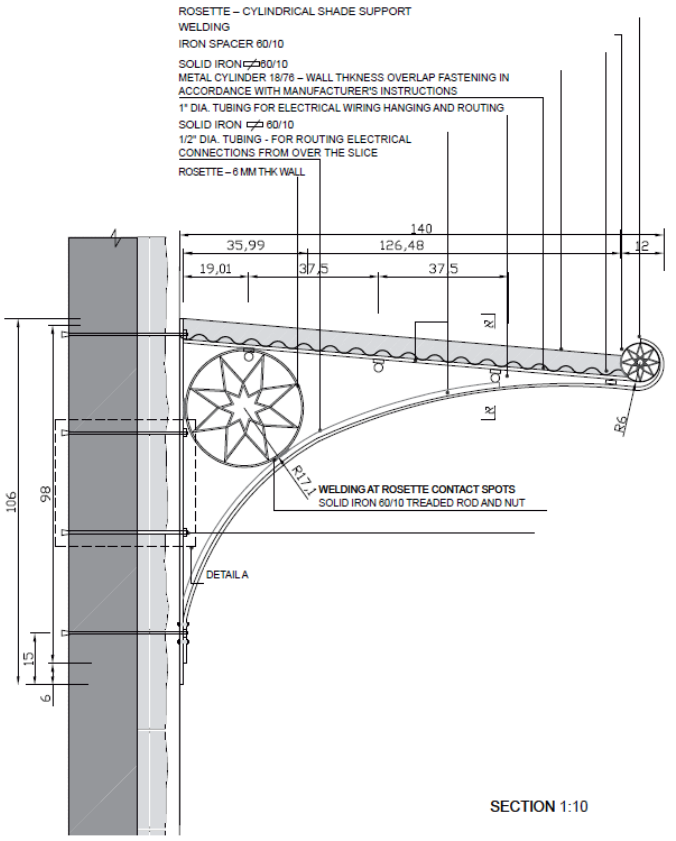

Figure 9. An example for an individual element- design section of a new awing compared with an existing one.

From Design to Construction

Following are two examples of implementation in different streets that have already been renovated:

Omar Ibn Al Khattab Square (Jaffa Gate) - Hierarchy- A - Tourism and Heritage. (see Figure 10)

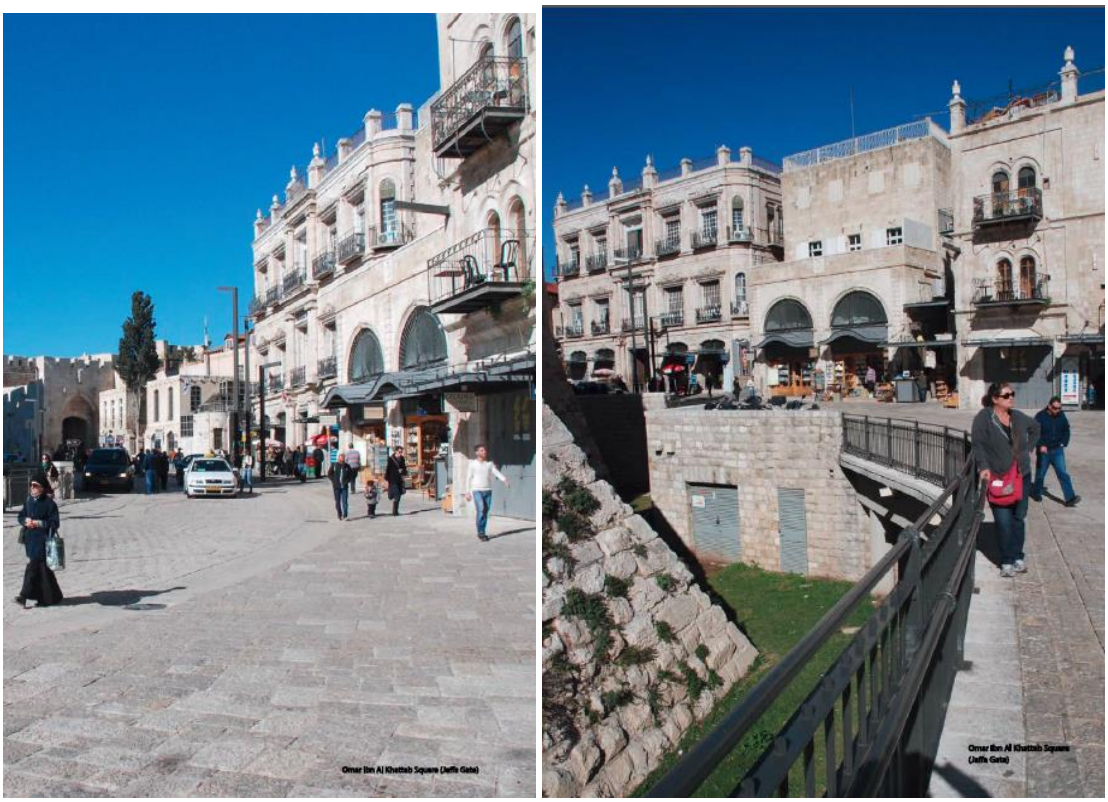

Figure 10: Omar Ibn Al Khattab Square (Jaffa Gate) Melzer-Igra-Cohen Architects and Urban Designers, Architect Guy Igra. These photographs show the finished renovations with an emphasis on the past and the comfort of the modern day, especially in the street's surface-stones and chiseling which is clean and highly maintained. The area is open and well lit to promote safety and personal security. All the poles were removed, (see the elegant awning) and were transferred to the façade. They were also reduced to a minimum in order to give an atmosphere of serenity and calmness, and in turn giving the center stage to those monuments that need to be the focus of attention.

High standards of design were used in the renovations in the Omar Ibn Al Khattab Square (Jaffa Gate) and utilized a mixture of past and modern methods in correlation with the importance of the area. (see Figure 11). This gate is the main entrance to the Old City, and therefore the decision was to prioritize improved access to pedestrians. The taxi station that dominated the public space in the past was removed entirely, and only a few vehicles are now allowed access. The street was leveled and only a minor curb marks the driving routes. The paving was replaced so that its texture meets modern safety standards and is easily maintained.

Figure 11: Modern fixtures such as the poles, garbage bins and benches were chosen to contrast with the old style oriental design of the buildings. The newly designed infrastructure cabinets within building facades resemble the ancient Mashrabiya[6] design style in nature and appearance but are based on a modern idea (IMSegev-"Segev Twist") of metal that looks woven even though it is only slightly curved.

[6] Mashrabiya is a typical element of Muslim architecture. It consists in a lattice, mostly made of wood, serving for building openings, windows or partitions. In this case, an industrial solution has been selected, based on the visual characteristics of Mashrabyia.

The Lion's Gate – Hierarchy A - Tourism and Heritage and B - Routine Life

The route leading from the Lion's Gate to the Via Dolorosa, was chosen to be the manual pilot for handrails (see Figure 12). The design was changed after the prototype had been set; for example the hand grip metals width and the decision to work with one metal piece. All fixtures were prepared in the factory and installed on site. The improved handrail in the photograph below looks like it has always been an integral part of the scenery.

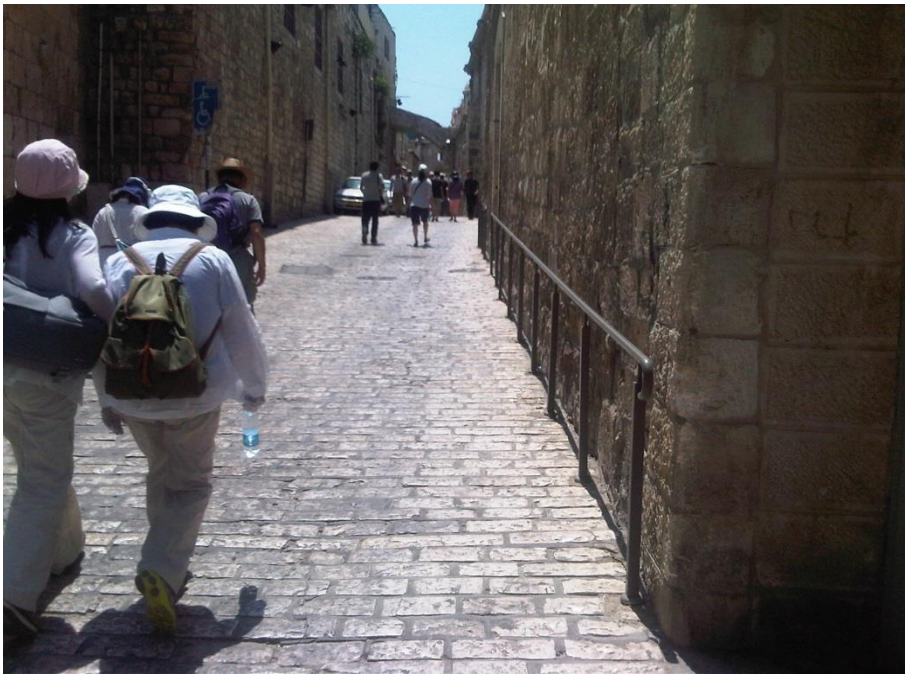

Figure 12. The location of the handrail presented a particular problem. The Preservation of Historical Building's Team did not permit any attachments to the wall, and therefore the handrail is attached only to the pavement and only to one side of the street. This innovation makes all the difference for people with mobility difficulties.

8. Summary and conclusions

In this article, the work of a multidisciplinary team was shown. The team presented a systematic, comprehensive professional and conceptual basis, for upgrading the infrastructure and accessibility as much as possible, in the very challenging and complex site of the Old City of Jerusalem.

It was clarified that the first step needs to be a site audit, using a carefully developed tool and data analysis criteria to collect consistent, reliable, and objective information as a basis for decision making. The outcome of the audit in the Old City enabled defining strategy and setting priorities for multiyear planning and intervention for the benefit of residents as well as tourists. The criteria used to assess accessibility were defined based on the interaction between disability and environment according to universal design principles, adapted to the circumstances of the Old City.

As a first step in implementing the plan, a manual for renovating streets in the Old City of Jerusalem was composed. The manual, serves as a guideline for detailed creative solutions for specific places and so maintain the general design through the city, while keeping the balance between the requirements of heritage; historic and archaeology; preservation, technical difficulties and accessibility needs.

Although accessibility could be obtained only partially in this complicated site, the upgrade of the infrastructure which was carried out so far, proved a great deal of difference.

Advanced technology to assist orientation and provide effective solutions for people with various kinds of disability as well as solution for transportation are yet to be studied.

The described pilot is based on universal values. It is expected that the audit tool as well as the manual guidelines can be adapted to old cities and heritage sites anywhere, in preparation for upgrading accessibility.

Research is recommended to test the system's usefulness in countries other than Israel, and to refine the criteria used for purposes of future evaluations.

Bibliography

ADA Accessibility guidelines for buildings and facilities (ADAAG) as amended through September 2010; accessed Aug. 10, 2014, from http://www.access-board.gov/adaag/html/adaag.htm

ADA Checklist for Readily Achievable Barrier removal. New England ADA Center, a project of the Institute for Human Centered Design and a member of the ADA National Network, based on the 2010 ADA Standards for Accessible Design, accessed Aug. 10, 2014 from: http:/www.**adachecklist**.org/doc/full**checklist**/**ada-checklist**.PDF

Bahat, D., and C. Rubinstein, *The Illustrated Atlas of Jerusalem*, New York: Simon & Shuster, 1990.

Barcelona Tourism. **Barcelona, for accessible tourism** http://www.barcelona-access.com Last viewed Aug. 15, 2014

Bendel, J., "Decision Support System for Evaluating Accessibility of Facilities," *The Israeli Journal of Occupational Therapy* Vol.15 (.3), 2006.

Bendel J., "Accessibility survey of the Old City Streets " in Hebrew, Jerusalem (Unpublished) 2008

Clemson L., Fitzgerald M.H, Heard R., & Cumming R.G., "Inter-rater reliability of a home fall hazards assessment tool," *Occupational Therapy Journal of Research*, 19(2): 83-100, 1999.

Davish Ben Moshe, M., "Streetscape Manual for the Old City of Jerusalem",Version 1, Jerusalem 2013, (In Hebrew) In: https://uploaded8.jerusalem.muni.il/mp3site/tuchnun/rehovot_oldcity.pdf

Emerson, V., "Accessibility Audit of the City of Ottawa's Public Transit System," Report submitted to Transit Committee and Council 6 February 2008

Jerusalem Statistical Yearbook (annual publication) 2014, Maya Choshen et all (ed.), Jerusalem: The Jerusalem institute for Israel Studies JIIS, 2014.

Open Doors Organization, *Easy Access Chicago*, http://www.easyaccesschicago.org/, 2010

Organization of World Heritage Cities, *A Management Guide of Historic Cities*, 1991. accessed Apr. 10, 2009, from http://urbo.ovpm.org

Prawer, J., *The Latin kingdom of Jerusalem*. London: Weidenfeld and Nicolson, 1972.

National Disability Authority (NDA) *Guidelines for Access Auditing of the Built Environment*, updated 2012 accessed Aug. 8, 2014 http://www.nda.ie/cntmgmtnew.nsf/0/71BAD80838B7B0C8802570C00050DFE6?OpenDocument.

Rubin, R., *Image and Reality, Jerusalem in Maps and Views*, Jerusalem, Israel: Magnes Press, 1999.

Shekel, The accessibility team, Leah Offer (Ed). "*Accessibility of Public Spaces in the Old City of Jerusalem for People with Disabilities -From Planning to Implementation"* Jerusalem Keter Digital, April 2011

Standards Institution of Israel, *SI 1918 (Israel Standard 1918): Accessibility of the built environment*, Tel-Aviv, 1998 and 2013

State of Israel, *Regulations for Equal Rights (accessibility in open spaces), 2008*.

The Enabler, Website / FAQ. 2005. Accessed August 8, 2014, from www.enabler.nu

Tourisme et Handicap association *http://www.tourisme-handicaps.org*/ last viewed Aug.15, 2014

Visit Britain http://www.visitbritain.com/en/EN/ last viewed Aug.15, 2014

UNESCO World Heritage Cities Programme, official site: http://whc.unesco.org/en/cities. 2013, Last viewd Aug. 15, 2014

U.K *Physical accessibility audit checklist* 2014 http://www.accessibleguide.co.uk/the

guide.html?gclid=CLWMirbTlMACFcrjwgodHQIADw

US Aid, Handicap International *"Physical accessibility audit checklist"*
Handicap International, Ethiopia , Addis Ababa Ethiopia
2010https://www.google.com/search?q=acessibilty+audit&gws_rd=ssl

Weiner-Singer Landscape Architecture, 2009. Jerusalem Streetscape Design Manual, Version 1.
https://www.jerusalem.muni.il/TargetAudience/Residents/PlanningandBuilding/Architects/PlanningandDesignGuidelines/Notebook35566/Pages/Default.aspx

Wycombe District *"Access Audit Checklist"*, www.wycombe.gov.uk. Last vied Aug. 15, 2014

Resources

"The ADA and City Governments: Common Problems," U.S. Department of Justice, Civil Rights Division, Disability Rights Section; accessed Aug. 1, 2009 from http://www.ada.gov/comprob.htm

Ben-Arieh, Y. and M. Davis, (eds.), *Jerusalem in the Mind of the Western World, 1800 - 1948*. Westport, Conn.: Praeger, 1997.

Jerusalem Tours, the municipal website: http://tour.jerusalem.muni.il/

Lahav D.Y., "Accessibility for pedestrians into old cities – the case of Jerusalem", lecture submitted to the POLIS International Conference – Universal Design of Buildings: Tools and Policy: *proceedings*, Bruges, Belgium, Nov. 16, 2006, pp101-102; accessed Aug. 1, 2009 from http://www.polis-ubd.net/conference/POLIS-Proceedings.pdf

Ramot A.. Lahav y., and J. Bendel, " Planning Accessibility In the Old City of Jerusalem" in *Universal Design Handbook second edition*, Preiser W.F.E., and K.H.Smith (eds.) U.S.A; MaGraw Hill, 2010 chapter 16 pp.16.1-16.11